ISSN 2395-1621

Power Generation by Suspension System Used in Automobile

#1Ajit Kulkarni, #2Dr. M. V. Nagarhall,#3 Prof. A. K. Mahindrakar

1ajit7065@gmail.com
2 ashwinmahindrakar.rmdssoe@sinhgad.edu

#123Department of Mechanical Engineering,RMD Sinhgad School of Engineering, Krantijyoti Savitribai Phule Pune University,Pune

ABSTRACT

The total work of project is about creating a system which can convert the locomotive motion of suspension system into rotary motion & from that generating electricity that is battery charging. Although suspension's piston will be never in continuous locomotive motion but there is always small change in position of piston. The system will have flywheel to store energy. The conversion of locomotive motion of piston can be converted by the rack & pinion, ratchet & pawl mechanism. Rack & pinion will convert the locomotive motion into rotary motion; ratchet & pawl mechanism will use only forward motion for charging of battery.

Keywords:- **Rachet & pawl, regenerative suspension.**

ARTICLE INFO

Article History

Received:30th September 2015

Received in revised form :

2nd October 2015

Accepted:6th October, 2015

Published online :

9th October 2015

I. INTRODUCTION

Vehicle suspension system is a mass-spring-damper system that isolates vehicle body frame from road random disturbance. Springs counter the weight of vehicle body. Dampers, also called shock absorber, undoubtedly they are the key components to damp the vibration which is transmitted from ground. More importantly, dampers are design to reduce the sudden effects of road disturbance such as hitting on a bump to achieve a smooth ride. In general, dampers are categorized into three classes according to their functionalities which are passive damper, semi-active damper, and active damper. As a result, the suspension systems are also divided into passive, semi-active, and active suspension systems.

If a road were perfectly flat, with no irregularities, suspensions wouldn't be necessary. But roads are far from flat. Even freshly paved highways have subtle imperfections that can interact with the wheels of a car. It's these imperfections that apply forces to the wheels. According to Newton's laws of motion, all forces have both **magnitude** and **direction**. A bump in the road causes the wheel to move up and down perpendicular to the road surface. The magnitude, of course, depends on whether the wheel is striking a giant bump or a tiny speck. In automobile there is battery for different operations like ignition, power supply for instrument panel, etc. So there should be proper system for charging of battery. Currently battery charging is done by magnetic coil or electric coil & this is done during when automobile is in motion. This project is about the power generation i.e. battery charging by using suspension system. In suspension system there is always a locomotive motion; the conversion of locomotive motion into the rotary motion can generate electricity i.e. battery charging. The suspension system always in motion so as to use the smallest change in position of piston of suspension a good system is required which has large sensitivity.

II. LITERATURE REVIEW

Yuxin Zhanga, Xinjie Zhanga, Min Zhana, Konghui Guoa, Fuquan Zhaoc, Zongwei Liuc has elaborated the design, modeling, and performance study of a novel hydraulic pumping regenerative suspension based on an energy recovery unit and a hydraulic actuator. It can harvest energy from suspension vibration and lessen damping oil temperature rising. In addition, variable damping force can be achieved by controlling the electrical load of the energy recovery unit, and proper asymmetric ratio of compression/extension damping

force needed by traditional vehicles can be obtained via the special layout of this suspension. It shows that an optimal regenerative power 33.4 W can be obtained from each regenerative suspension via the GA optimization. The physical based model and parameter study in this paper can be used in the regenerative suspension semi-active controller design and the development of this novel hydraulic pumping regenerative suspension in the future.

Guoguang Zhang, Jianyong Cao, Fan explained active and energy-regenerative controllers are designed for the DC-motor-based suspension, which is able to operate in two modes: active control for ride comfort promotion and energy-regenerative control for energy harvesting. In order to achieve these two modes, the main torque-tracking loop control structure is presented in this paper. Then by simplifying torque-tracking loop, working areas of the DC-motor actuator are analyzed. As for main loop controller design, H1 robust control is investigated for the active suspension based on a full-car suspension model. The restricted H1 controller, which is the combination of proposed H1 controller and a restriction strategy that confines the motor to the working areas of energy regeneration, is employed as the main controller to realize energy regeneration. Simulations are carried out with random uneven road inputs and the results demonstrate that better ride comfort can be achieved by proposed active suspension and energy-regenerative (ER) suspension compared with passive counterpart. Meanwhile, capacity of energy regeneration is also ensured by the ER suspension. The DC-motor-based suspension has been proved to be in high efficiency, rapid response and good controllability. Its operating states are analyzed through simplifying the three-phase motor control system into an equivalent control circuit.

Zhongjie Li, Lei Zuo, Jian Kuang, and George Luhrs has explained Energy-harvesting shock absorber is able to recover the energy otherwise dissipated in the suspension vibration while simultaneously suppress the vibration induced by road roughness. It can work as a controllable damper as well as an energy generator. An innovative design of regenerative shock absorbers is proposed in this paper, with the advantage of significantly improving the energy harvesting efficiency and reducing the impact forces caused by oscillation. The key component is a unique motion mechanism, which we called “mechanical motion rectifier (MMR)”, to convert the oscillatory vibration into unidirectional rotation of the generator. An implementation of motion rectifier based harvester with high compactness is introduced and prototyped. A dynamic model is created to analyze the general properties of the motion rectifier by making analogy between mechanical systems and electrical circuits. The model is capable of analyzing electrical and mechanical components at the same time. Both simulation and experiments are carried out to verify the modeling and the advantages. The prototype achieved over 60% efficiency at high frequency, much better than the conventional regenerative shock absorbers in oscillatory motion. Furthermore, road tests are done to demonstrate the feasibility of the MMR shock absorber, in which more than 15 Watts of electricity is harvested while driving at 15 mph on a smooth paved road. The motion rectifier based design can also be used for other applications of vibration energy harvesting such as from tall buildings or long bridges.

III. DESIGN OF SYSTEM

A regenerative shock absorber is a type of shock absorber that converts parasitic intermittent linear motion and vibration into useful energy, such as electricity. Conventional shock absorbers simply dissipate this energy as heat. The design of system will based o the the following calculations:

The power generated by the suspension system can be given by following calculations:

Assume the mass of a vehicle moving over the speed breaker = 150Kg (Approx.)

.Height of speed brake =10 cm

Work done=Force x Distance

Where,

Force = Weight of the Body

= 150 Kg x 9.81m/s2

= 1471.5 N

Distance travelled by the body = Height of the speed brake =10 cm

Output power= (1471.5 x 0.1)/60

= 2.452 Watts (For One pushing force)

Power developed for 1 vehicle passing over the speed breaker arrangement for one minute = 2.452 watts

Power developed for one hour =147.12 watts

Power developed for one day = 3.531 KW

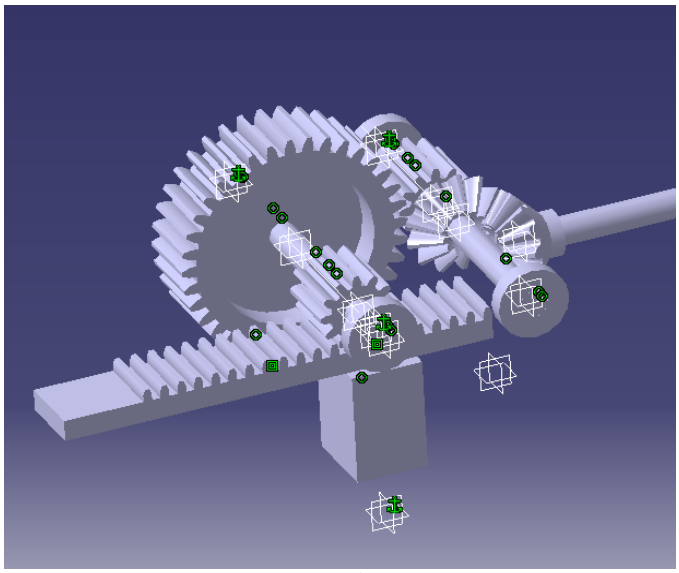

Fig: 1 Model of System

Fig. 1 shows the entire model of system which can convert the locomotive motion into rotary motion by rack & pinion, rachet & pawl mechanism. The rack will be attached to the suspension system when it will move the all mechanism will rotate.

IV. ANALYSIS

Before the analysis there should be meshing of entire model. Fig. 2 shows the meshing of model.

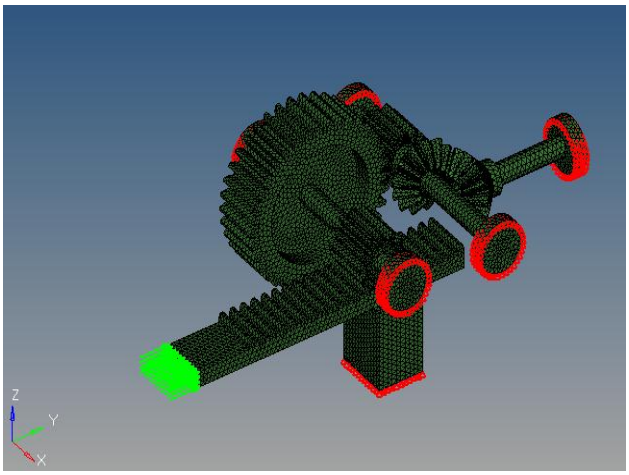

Fig.2: Meshed model of system

Loading conditions:
Mass of the vehicle 2000kg approximately (2000*9.81 N)
Weight on a single wheel is =2000/4=500kg
The impact of 5000 N on suspension system, which in turn strikes the 5000N force on Rack and pinion arrangement
Applying the constraints by arresting 3 translational degrees of freedom on the outer surfaces of bearing which holds the axles.The following table shows the meshing details of entire system.

TABLE I: Meshing details of system

Element type	Tetra
Element size	2
Number of Nodes	24548
Number of Elements	94448

After the meshing of system there is next step for analysis. In analysis two factors are considered that are stress & displacement. Fig. 3 & Fig. 4 shows the stress & displacement results which are taken by ANSYS software.

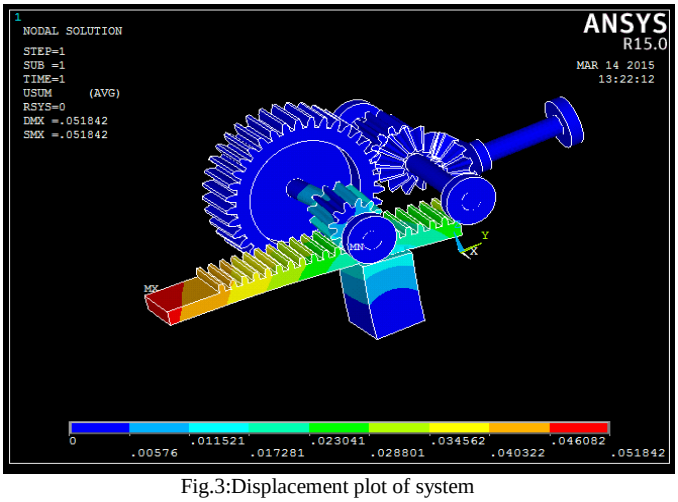

Fig.3:Displacement plot of system

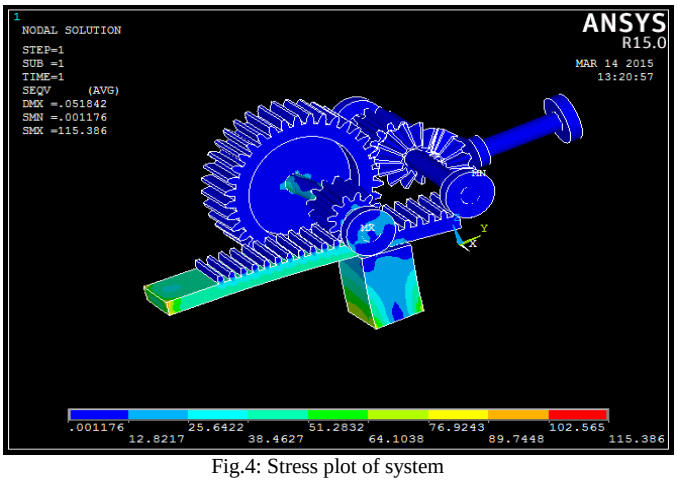

Fig.4: Stress plot of system

As from fig.3 & fig.4 it is clear that the maximum displacement will be 0.051842mm & maximum stress will be 115.386 MPa, from this it is clear that the design is safe because maximum stresses are 115Mpa which is lesser than the allowable stresses (250Mpa)of mild steel.Hence the design is safe.

V. EXPERIMENTATION &VALIDATION

As the analysis results give the reliability. The actual validation will be on the suspension system. When system will activate the current will be generated that can be calculate by ammeter. After the generating the electricity we can adopt it into the vehicle. The generation of electricity will be done by simple dynamo. It has ability to generate electricity from rotating input shaft.

VI.CONCLUSION

From all the meshing & analysis data it is concluded that the design is safe, hence it can sustain under the vehicle load. The system have ability to convert the locomotive motion of suspension into rotary motion .After the conversion of motion the generator can generate the electricity. The main purpose of project is to design a reliable system which can sustain the load. We can also say that the generation of electricity also gives the extra fuel efficiency. On the smooth highway road, the regenerative shock absorbers can improve the fuel efficiency by 2%, and on bumpy roads up to 10% increase can be expected.

ACKNOWLEDGMENT

Thanks to Dr. M. V. Nagarhalli & Prof. A.K.Mahindrakar for giving such a valuable guidance to complete this prject.Thanks to RMD SInhgad School of Engineering, Warje for support.

REFERENCES

[1] Yuxin Zhang, Xinjie Zhang, Min Zhan, Konghui Guo, Fuquan Zhao, Zongwei Liu “Study on a novel hydraulic pumping regenerative suspension for vehicles”, Journal of Franklin Institute ,June 2014.

[2] Guoguang Zhang, Jianyong Cao, Fan Yu "Design of active and energy-regenerative controllers for DC-motor-based suspension", Mechatronics 22 (2012) 1124–1134.

[3] Zhang Jin-qiu, Peng Zhi-zhao, Zhang Lei, Zhang Yu, "A Review on Energy-Regenerative Suspension Systems for Vehicles", Proceedings of the World Congress on Engineering 2013 Vol III, WCE 2013, July 3 - 5, 2013, London, U.K.

[4] Zhangjie li, Lie Zuo, Jian Kuang, George Luhrs, "Energy Harvesting shock absorber with a mechanical motion e=rectifier", Dept. Of mechanical engineering of state university of New York at Stony Brook, NY 11794.

[5] Pei S.Z., "Design of Electromagnetic Shock Absorbers for Energy Harvesting from Vehicle Suspensions", Master Degree Thesis, Stony Brook University, 2010.

[6] H Su P, "Power recovery property of electrical active suspension systems", Proceedings of the Inter Society Energy Conversion Engineering Conference, Washington DC, USA: IEEE, 1996, pp. 1899-1904.

[7] Zuo L, Scully B, Shestani J, and Zhou Y "Design and Characterization of an Electromagnetic Energy Harvester for Vehicle Suspensions", Smart Material and Structures, 2010,19, 1007-1016.

[8] Li Z, Zuo L, Luhrs G, Lin L, and Qin Y 2012 Design, Modeling, and Road Tests of Electromagnetic Energy-Harvesting Shock Absorbers ASME Dynamics Systems and Control Conferences, FL.

